www.kytola.com

Kytola INSTRUMENTS

The KYTOLA® Variable Area Flow Meter Model E is a high quality flow meter made from clear acrylic.

It is a reliable and easy-to-read instrument for measuring and monitoring liquid and gas flows.

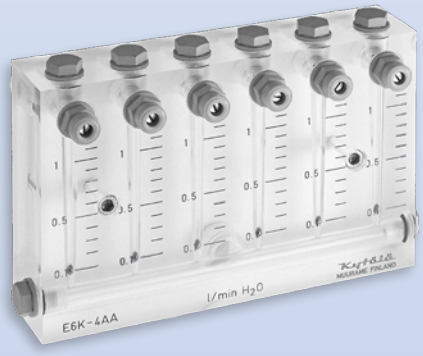

- For liquid or gas
- Several flow ranges
- Single or multi-tube versions
- Clear, easy-to-read scale

ISO 9001 ISO 14001

FLOW METER
E

Model E is available in single tube and multi-tube versions with many options, and it is also available in customized designs.

FEATURES

- Acrylic body
- Flow adjustment valve

TYPICAL APPLICATIONS

- Water and air purging
- Gas measurements
- Liquid measurements

OPTIONS

- Special scale markings
- Scales for alternative liquids and gases
- Thread adapters
- Inductive low or high flow alarm
- Viton® or EPDM seals

E TECHNICAL DATA

Model	EK	EH
Valve housing / plugs	Nylon	AISI 316
Valve spindle	AISI 316	AISI 316
Weight	170 g	200 g
Body	Acrylic (PMMA)	
Seals	Nitrile (*Viton®, EPDM)	
Max. pressure	20 bar (30 bar / 30°C)	
Max. temperature	+75°C	
Connections	G 1/4", thread adapters must be used for NPT connections	
Accuracy	±5% F.S. (H_2O, +20°C)	
		*) Special construction on request

E ■ – ■ ■ – ■

Valve Housing / Plug Material

Nylon	K
AISI 316	H

Flow Range

H_2O	Air NL/min	
2 – 16 mL/min	0.1 – 0.8	2K
2.5 – 30 mL/min	0.1 – 1.2	2L
5 – 55 mL/min	0.2 – 1.8	2M
10 – 80 mL/min	0.4 – 2.6	2N
0.01 – 0.11 L/min	0.5 – 5.5	3K
0.02 – 0.18 L/min	0.5 – 7	3L
0.025 – 0.3 L/min	1 – 9	3M
0.05 – 0.45 L/min	1 – 12	3N
0.05 – 0.5 L/min	2 – 20	4B
0.1 – 1.1 L/min	2 – 36	4A
0.2 – 1.6 L/min	7.5 – 47.5	5E
0.2 – 2.2 L/min	5 – 70	5S
0.5 – 2.5 L/min	10 – 90	5F

Scale

H_2O (L/min) at +20°C	A
Air (NL/min) at +20°C / 1.013 bar (abs)	R

Special Features

Hand knob	H
Nitrile seals (standard)	*blank*
Viton® seals	V

Fixed side mounted flow alarm available for single tube models 2M, 2N, 3M, 3N, 4A, 5E, 5S, 5F – consult factory

NOTE: Thread adapters must be used for NPT connections.

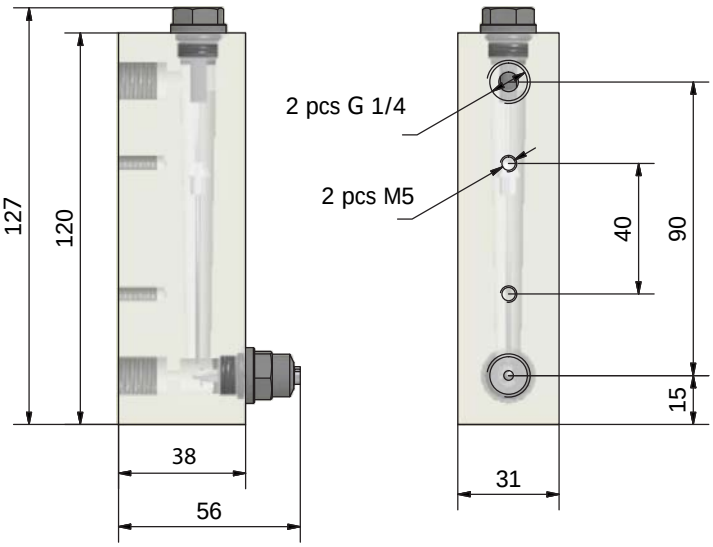

Copyright© Kytola Instruments Oy 2019. Dimensions and measurements are given within normal tolerances. Manufacturer reserves the right to changes without prior notification. - File: E_es15_en Published 3/2019

Kytola INSTRUMENTS
www.kytola.com

MANAGEMENT SYSTEM CERTIFICATION DNV·GL ISO 9001 = ISO 14001

Kytola Instruments Oy
Olli Kytölän tie 1
FI-40950 Muurame, Finland
Tel. +358 20 779 0690
Fax +358 14 631 419
E-mail info@kytola.com